RALAS
Advanced light attack system

Light Offensive Rocket and Non Line of sight system

RALAS missile system is graded as a tactical system for backup of infantry action whose primary device is modern guided projectile with its own propulsion. RALAS system is designed for battlefield isolation and anti-armor combat at distances up to 9 km. Missile of RALAS system is consisted of following functional units – sub-systems:

- Homing system with gyro stabilized TV camera,
- Control subsystem,
- Payload (HEAT warhead capable to penetrate up to 1000 mm armored steel plate),
- Propulsion group consist of solid propellant rocket engines, sustainer and booster,
- Communication subsystem based on real time fiber optic communication (Communication subsystem contains coil holder – spool with 9 km of winded optic cable, electronic set of video emitter of laser signal with digital signal transceiver).

The missile is stored in a launch canister, which provides storage for more than ten years without preventive maintenance. Mounted on its launch platform the RALAS missile is ready to fire. The launch platform can be integrated on different systems as ground vehicle, small ship or helicopter depends on end user request.

Missile data :

- Body diameter 175 mm
- Wing span 1500 mm
- Operational altitude 50~5000 m
- Equivalent flight speed >600 km/h
- Flight altitude 500 m
- Endurance 40 sec
- Limit of overload 4 g
- Max. weight in flight 57 kg
- Propulsion type

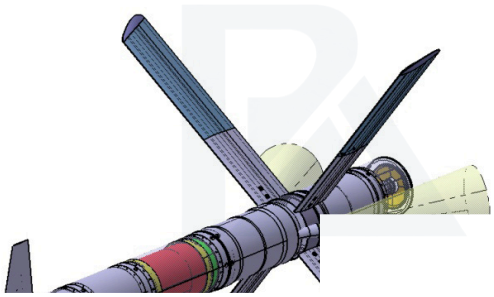

Concept of RALAS system represents development of multipurpose rocket system designed for actions on distance without visual contact with the target. RALAS system is primarily designed for anti-armor battle on distance for needs of actions of other land forces echelon. Concept of RALAS system enables actions on distances up to 9 km and RALAS system is primarily designed for stopping of tank attack by action on mid-range distance according on area of tank battle group forming, In addition, RALAS system enables unit actions or coordination of more launching platforms. Main formation-battery of RALAS system is consisted of command light road vehicle or semi-armored vehicle and four vehicles with 4-6 launching devices with rockets. There is an option to join a following vehicle as a spare command vehicle and vehicle for transport of additional launching devices with rockets of type RALAS.

Multipurpose of RALAS system is proved on possibility of changing the priority targets during the mission (based on decision of mission operator-officer), maneuvering in action area, and of choosing programmed trajectory based on input target data and trajectory parameters from ground station uploaded before flight.

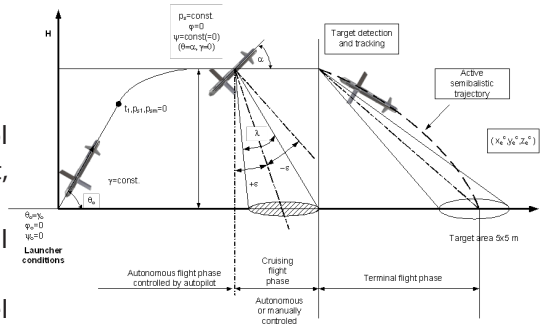

The advantages of the man in the loop system are:

- The operator can pick up the commands at any time, in order to control fire, to choose the point of impact as the missile approaches the target, and to obtain an immediate kill assessment
- Precision target identification with target selection and final identification by the operator
- High impact precision regardless of firing distance, with the level of precision increasing as the missile approaches the target, thus permitting a highly-effective surgical strike
- Firing from concealed positions ensures protection of the weapon system and crew safety. It is possible to use the image during missile flight to enhance the surveillance picture, or to provide further target designation, and also for recording for further analysis.

Combat effectiveness

HEAT stands for High Explosive Anti-Tank. HEAT rounds are also known as "shaped charges". By shaping the explosives in an inverted cone, and usually lining this cone with a copper sheath, the explosive effect can be channeled into a very small spot on the target. This superheated jet of fire and molten copper then "burns" through the armor. While this produces only a small hole in the armor, the fire and copper tend to ignite anything inside the vehicle.

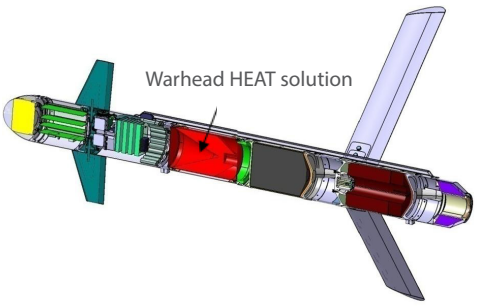

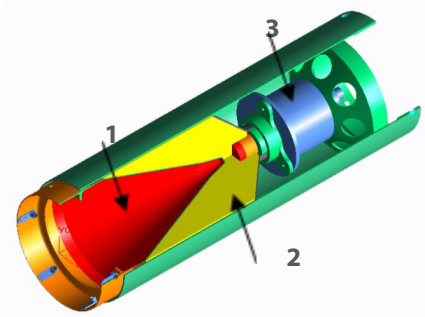

1. Inverse-cone hollow room, covered with thin metal layer, which the penetrator is built from
2. Explosive combat charge
3. Fuse

RALAS system integration on combat helicopter

Helicopter as highly maneuverable launching platform, increases capabilities of tactical missile system in land attack combat role. RALAS missile system can be integrated on different helicopters airframes depend on end user request. In this case is presented integration on combat version on well-known Mi-17 helicopter platform.

In helicopter attack mode launching can be provided from hovering altitude 50 m relative on ground. In this combat scenario target is positioned at distance 8000 m. After launching, missile climbs to cruising altitude. Target can be marked and tracked at distances up to 2500 m measuring on line of sight. After target lock on, missile continue descent flight and start terminal flight phase automatically following target motion and hit target with pin point accuracy.